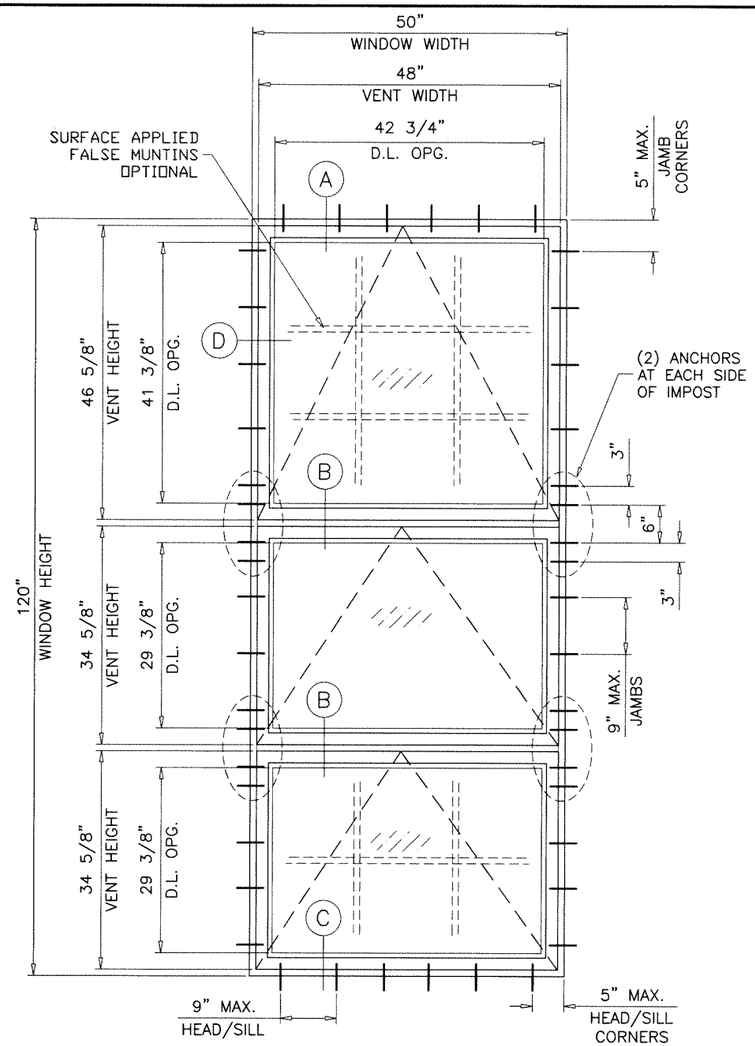

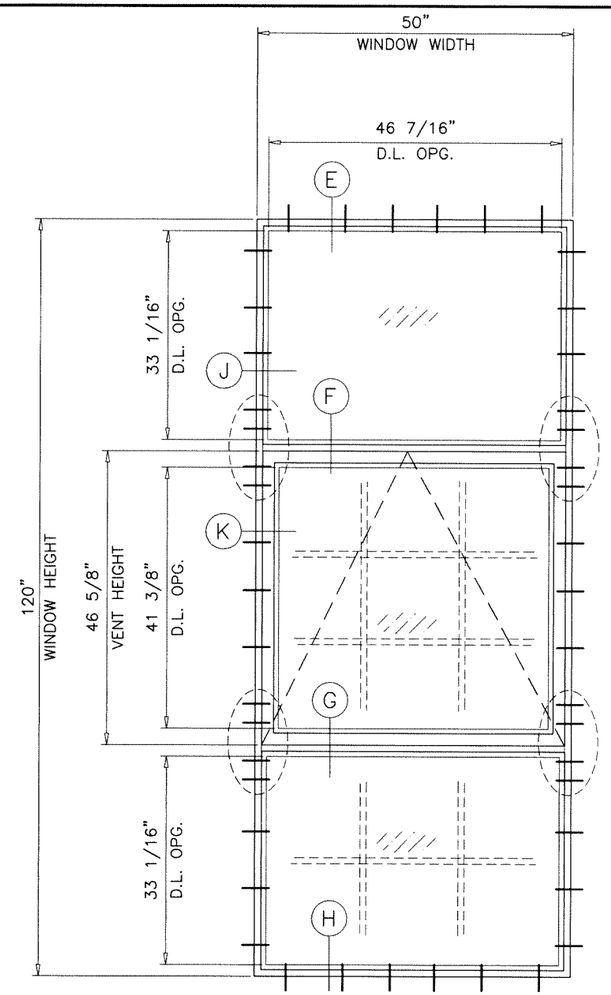

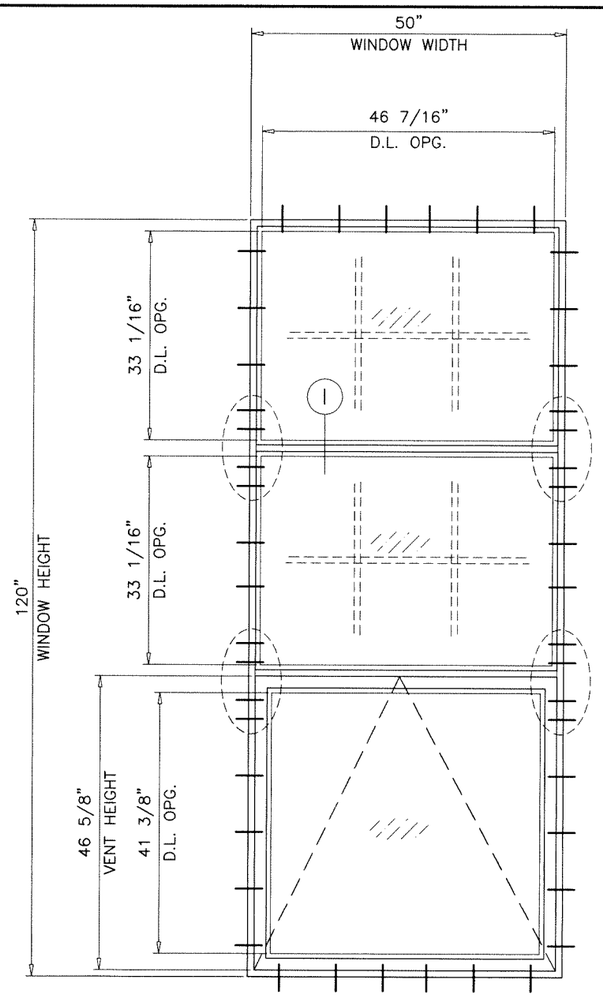

TYPICAL ELEVATIONS

SERIES–3062/3000
ALUMINUM PROJECTED WINDOW

SEE SHEETS 2 THRU 4 FOR DESIGN LOAD RATINGS.

APPROVAL APPLIES TO SINGLE UNITS OR SIDE BY SIDE COMBINATIONS OF PROJECTED/PROJECTED OR PROJECTED WDW. WITH OTHER WINDOW TYPES IN MODULES OF TWO OR MORE WINDOWS USING F.B.C. APPROVED MULLIONS IN BETWEEN. LOWER DESIGN PRESSURE FROM WINDOWS OR MULLION APPROVAL WILL APPLY TO ENTIRE SYSTEM.

THIS PRODUCT HAS BEEN DESIGNED AND TESTED TO COMPLY WITH THE REQUIREMENTS OF THE 2023 (8TH EDITION) FLORIDA BUILDING CODE INCLUDING HIGH VELOCITY HURRICANE ZONE (HVHZ).

1BY OR 2BY WOOD BUCKS & BUCK FASTENERS BY OTHERS, MUST BE DESIGNED AND INSTALLED ADEQUATELY TO TRANSFER APPLIED PRODUCT LOADS TO THE BUILDING STRUCTURE.

ANCHORS SHALL BE CORROSION RESISTANT, SPACED AS SHOWN ON DETAILS AND INSTALLED PER MANUF'S INSTRUCTIONS. SPECIFIED EMBEDMENT TO BASE MATERIAL SHALL BE BEYOND WALL DRESSING OR STUCCO.

A LOAD DURATION INCREASE IS USED IN DESIGN OF ANCHORS INTO WOOD ONLY.

ALL SHIMS TO BE HIGH IMPACT, NON–METALLIC AND NON–COMPRESSIBLE.

MATERIALS INCLUDING BUT NOT LIMITED TO STEEL/METAL SCREWS, THAT COME INTO CONTACT WITH OTHER DISSIMILAR MATERIALS SHALL MEET THE REQUIREMENTS OF THE 2023 FLORIDA BLDG. CODE & ADOPTED STANDARDS.

THIS PRODUCT APPROVAL IS GENERIC AND DOES NOT PROVIDE INFORMATION FOR A SITE SPECIFIC PROJECT, i.e. LIFE SAFETY OF THIS PRODUCT, ADEQUACY OF STRUCTURE RECEIVING THIS PRODUCT AND SEALING AROUND OPENING FOR WATER INFILTRATION RESISTANCE ETC.
CONDITIONS NOT SHOWN IN THIS DRAWING ARE TO BE ANALYZED SEPARATELY, AND TO BE REVIEWED BY BUILDING OFFICIAL.

DESIGN LOADS SHOWN ARE BASED ON 'ALLOWABLE STRESS DESIGN (ASD)'.

MANUFACTURER'S LABEL SHALL BE LOCATED ON A READILY VISIBLE LOCATION IN ACCORDANCE WITH SECTION 1709.9.3 OF FLORIDA BUILDING CODE. LABELING TO COMPLY WITH SECTION 1709.9.2.

THESE WINDOWS ARE RATED FOR LARGE & SMALL MISSILE IMPACT. SHUTTERS ARE NOT REQUIRED.

Sealed: 12/18/2023

FL #19976

A– CONTRACTOR TO BE RESPONSIBLE FOR THE SELECTION, PURCHASE AND INSTALLATION OF THIS PRODUCT BASED ON THIS PRODUCT EVALUATION PROVIDED HE/SHE DOES NOT DEVIATE FROM THE CONDITIONS DETAILED ON THIS DOCUMENT.

B– THIS PRODUCT EVALUATION DOCUMENT WILL BE CONSIDERED INVALID IF ALTERED BY ANY MEANS.

C– SITE SPECIFIC PROJECTS SHALL BE PREPARED BY A FLORIDA REGISTERED ENGINEER OR ARCHITECT WHICH WILL BECOME THE ENGINEER OF RECORD (E.O.R.) FOR THE PROJECT AND WHO WILL BE RESPONSIBLE FOR THE PROPER USE OF THE P.E.D. ENGINEER OF RECORD, ACTING AS A DELEGATED ENGINEER TO THE P.E.D. ENGINEER SHALL SUBMIT TO THIS LATTER THE SITE SPECIFIC DRAWINGS FOR REVIEW.

D– THIS P.E.D. SHALL BEAR THE DATE AND ORIGINAL SEAL AND SIGNATURE OF THE PROFESSIONAL ENGINEER OF RECORD THAT PREPARED IT.

JALAL FAROOQ
LICENSE
No. 81223
STATE OF FLORIDA
PROFESSIONAL ENGINEER

AL-FAROOQ CORPORATION
ENGINEERS & PRODUCT DEVELOPMENT
9360 SUNSET DRIVE, SUITE 220
MIAMI, FLORIDA 33173 (C.A.N. 3538)
TEL. (305) 264-8100 FAX. (305) 262-6978

COMP–ANL\W16–11SAT

S–3000/3062 ALUM. PROJECTED WDW. (L.M.I.)

SOL–A–TROL ALUMINUM PRODUCTS
4101 N.W. 132ND STREET
MIAMI, FL. 33054
TEL. (305) 681–2020 FAX. (305) 681–2035

revisions:

no	date	by	description
A	07.08.16		GLASS TYPE I ADDED
B	11.28.18		UPDATED TO 2017 FBC
C	10.27.23		UPDATED TO 2023 FBC

date: 02–15–16
scale: 1/2"=1'–0"
dr. by: TARIQ
chk. by:

drawing no.
W16–11

sheet 1 of 12

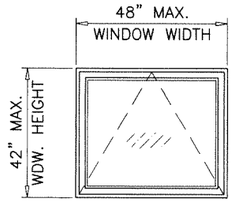

MAX. DESIGN LOAD RATING = + 80.0
– 80.0 PSF

GLASS TYPES
'A', 'B', 'D', 'F', 'G', 'H' & 'I'

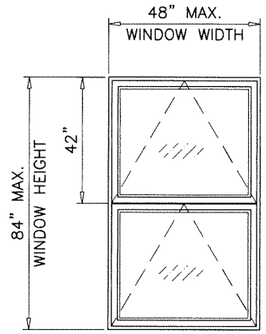

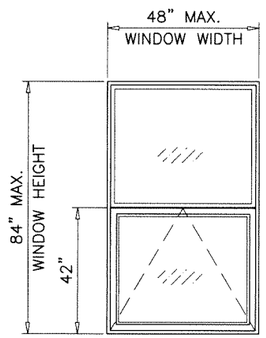

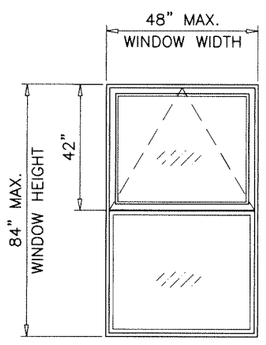

MAX. DESIGN LOAD RATING = + 80.0
– 80.0 PSF

GLASS TYPES
'A', 'B', 'D', 'F', 'G', 'H' & 'I'

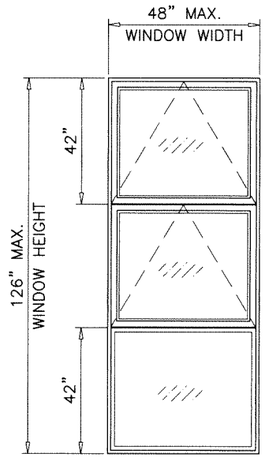

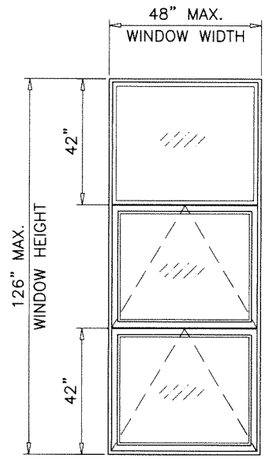

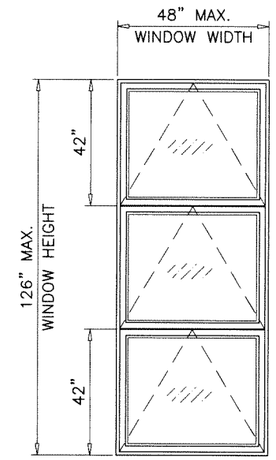

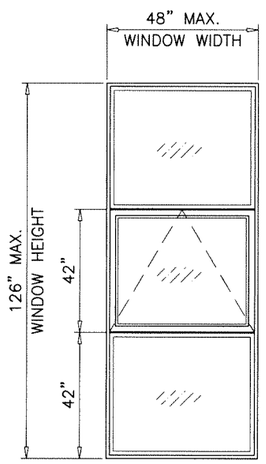

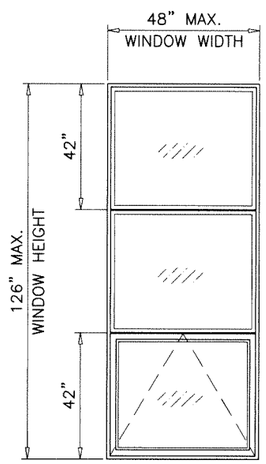

MAX. DESIGN LOAD RATING = + 80.0
– 80.0 PSF

GLASS TYPES
'A', 'B', 'D', 'F', 'G', 'H' & 'I'

NOTE:
GLASS CAPACITIES ON THIS SHEET ARE BASED ON ASTM E1300–09 (3 SEC. GUSTS) AND FLORIDA BUILDING COMMISSION DECLARATORY STATEMENT DCA05–DEC–219

APPROVED CONFIGURATIONS
SERIES–3062

Sealed: 12/18/2023

FL #19976

JALAL FAROOQ
LICENSE
No. 81223
STATE OF FLORIDA
PROFESSIONAL ENGINEER

AL-FAROOQ CORPORATION
ENGINEERS & PRODUCT DEVELOPMENT
9360 SUNSET DRIVE, SUITE 220
MIAMI, FLORIDA 33173 (C.A.N. 3538)
TEL. (305) 264-8100 FAX. (305) 262-6978

COMP–ANL\W16–11SAT

S–3000/3062 ALUM. PROJECTED WDW. (L.M.I.)

SOL–A–TROL ALUMINUM PRODUCTS
4101 N.W. 132ND STREET
MIAMI, FL. 33054
TEL. (305) 681–2020 FAX. (305) 681–2035

revisions:

no	date	by	description

date: 02–15–16
scale: –
dr. by: HAMID
chk. by:

drawing no.
W16–11

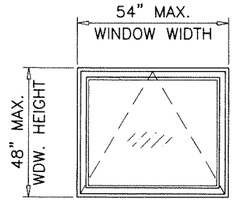

MAX. DESIGN LOAD RATING = + 75.0
GLASS TYPES 'G' & 'H' **– 95.0 PSF**

MAX. DESIGN LOAD RATING = + 75.0
GLASS TYPES 'I' **– 80.0 PSF**

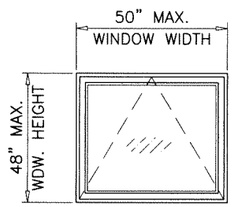

MAX. DESIGN LOAD RATING = + 80.0
GLASS TYPE 'F' **– 90.0 PSF**

MAX. DESIGN LOAD RATING = + 80.0
GLASS TYPE 'I' **– 80.0 PSF**

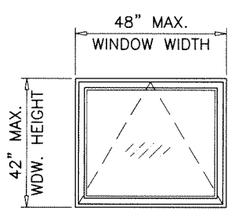

MAX. DESIGN LOAD RATING = + 100.0
GLASS TYPES 'D' & 'F' **– 100.0 PSF**

MAX. DESIGN LOAD RATING = + 80.0
GLASS TYPES 'A', 'B' & 'I' **– 80.0 PSF**

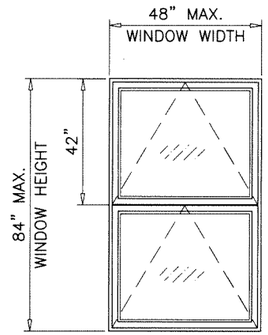

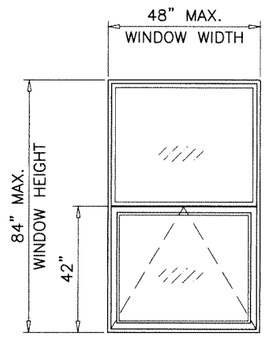

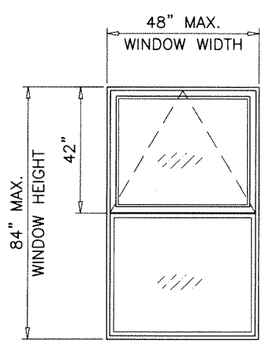

MAX. DESIGN LOAD RATING = + 100.0
GLASS TYPES 'D' & 'F' **– 100.0 PSF**

MAX. DESIGN LOAD RATING = + 75.0
GLASS TYPES 'G' & 'H' **– 95.0 PSF**

MAX. DESIGN LOAD RATING = + 80.0
GLASS TYPES 'A', 'B' & 'I' **– 80.0 PSF**

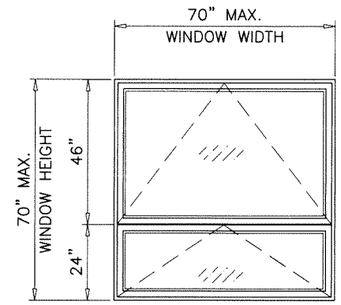

MAX. DESIGN LOAD RATING = + 65.0
GLASS TYPE 'C' **– 75.0 PSF**

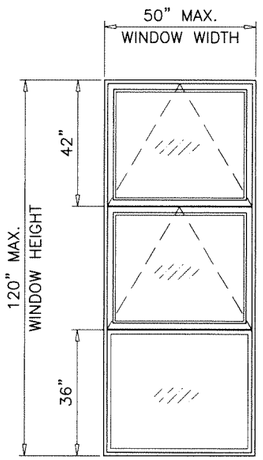

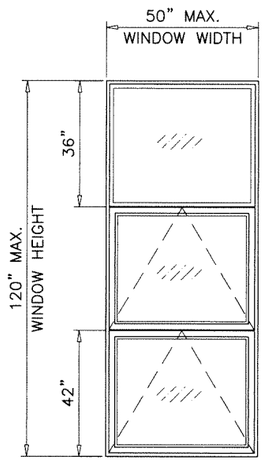

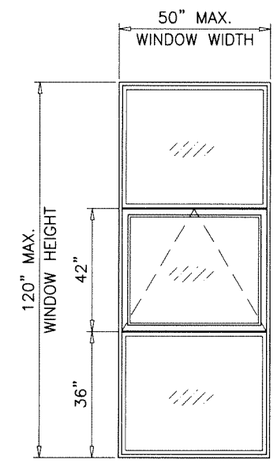

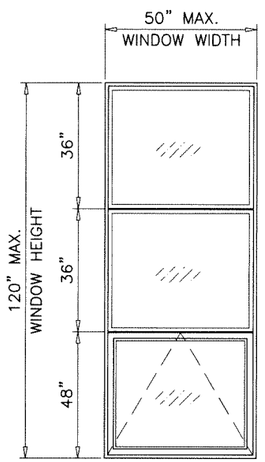

MAX. DESIGN LOAD RATING = + 80.0
GLASS TYPE 'F' **– 90.0 PSF**

MAX. DESIGN LOAD RATING = + 75.0
GLASS TYPES 'G' & 'H' **– 95.0 PSF**

MAX. DESIGN LOAD RATING = + 80.0
GLASS TYPES 'I' **– 80.0 PSF**

APPROVED CONFIGURATIONS
SERIES–3000

NOTE:
GLASS CAPACITIES ON THIS SHEET ARE BASED ON ASTM E1300–09 (3 SEC. GUSTS) AND FLORIDA BUILDING COMMISSION DECLARATORY STATEMENT DCA05–DEC–219

NOTE:
FOR STACKED WINDOW WITH EQUAL LITES USE SMALLEST VENT HEIGHT SHOWN ABOVE.

Sealed: 12/18/2023

FL #19976

JALAL FAROOQ
LICENSE
No. 81223
STATE OF FLORIDA
PROFESSIONAL ENGINEER

AL-FAROOQ CORPORATION
ENGINEERS & PRODUCT DEVELOPMENT
9360 SUNSET DRIVE, SUITE 220
MIAMI, FLORIDA 33173 (C.A.N. 3538)
TEL. (305) 264-8100 FAX. (305) 262-6978

COMP–ANL\W16–11SAT

S–3000/3062 ALUM. PROJECTED WDW. (L.M.I.)

SOL–A–TROL ALUMINUM PRODUCTS
4101 N.W. 132ND STREET
MIAMI, FL. 33054
TEL. (305) 681–2020 FAX. (305) 681–2035

revisions:

no	date	by	description

date: 02–15–16
scale: –
dr. by: HAMID
chk. by:

drawing no. W16–11

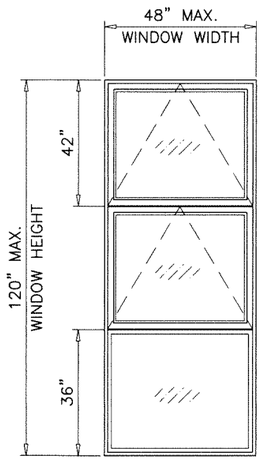

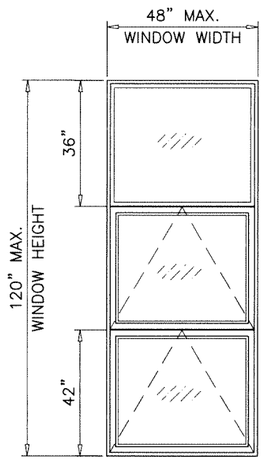

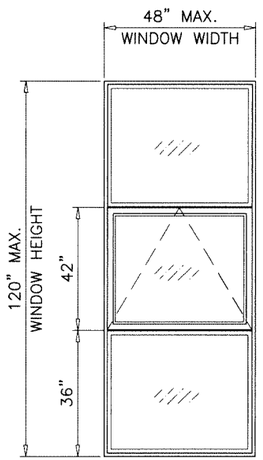

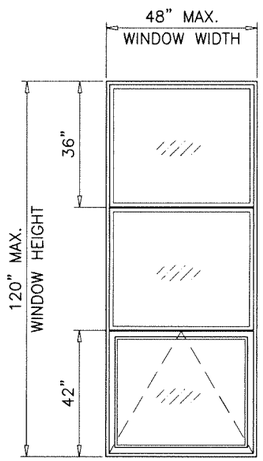

MAX. DESIGN LOAD RATING = + 100.0
GLASS TYPES 'D' & 'F' **– 100.0 PSF**

MAX. DESIGN LOAD RATING = + 80.0
GLASS TYPES 'A', 'B' & 'I' **– 80.0 PSF**

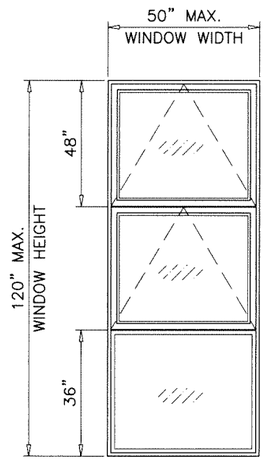

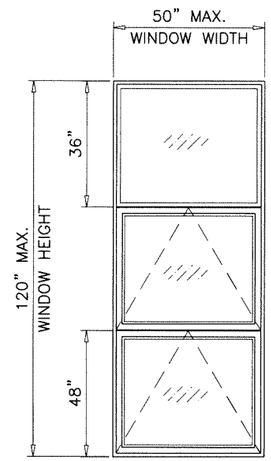

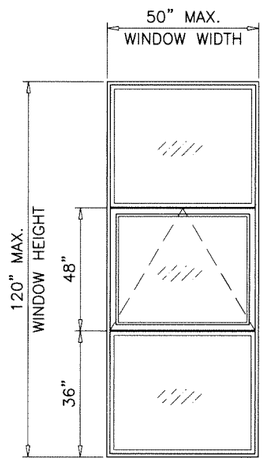

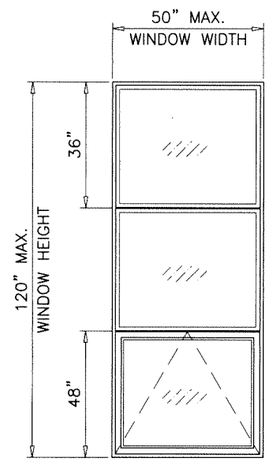

MAX. DESIGN LOAD RATING = + 80.0
GLASS TYPES 'D' & 'F' **– 90.0 PSF**

MAX. DESIGN LOAD RATING = + 80.0
GLASS TYPE 'I' **– 80.0 PSF**

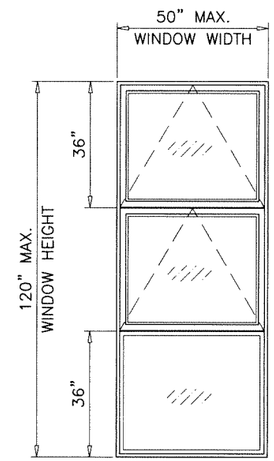

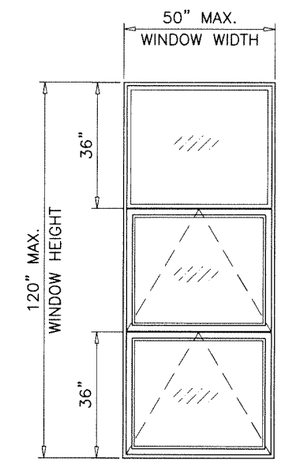

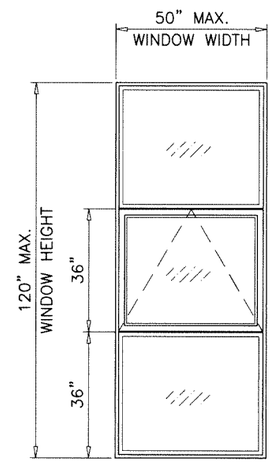

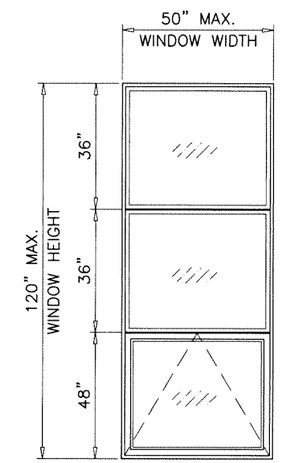

MAX. DESIGN LOAD RATING = + 100.0
GLASS TYPES 'D' & 'F' **– 100.0 PSF**

MAX. DESIGN LOAD RATING = + 75.0
GLASS TYPES 'G' & 'H' **– 95.0 PSF**

MAX. DESIGN LOAD RATING = + 80.0
GLASS TYPE 'I' **– 80.0 PSF**

NOTE:
GLASS CAPACITIES ON THIS SHEET ARE BASED ON ASTM E1300–09 (3 SEC. GUSTS) AND FLORIDA BUILDING COMMISSION DECLARATORY STATEMENT DCA05–DEC–219

APPROVED CONFIGURATIONS
SERIES–3000

NOTE:
FOR STACKED WINDOW WITH EQUAL LITES USE SMALLEST VENT HEIGHT SHOWN ABOVE.

Sealed: 12/18/2023

FL #19976

JALAL FAROOQ
LICENSE
No. 81223
STATE OF FLORIDA
PROFESSIONAL ENGINEER

AL-FAROOQ CORPORATION
ENGINEERS & PRODUCT DEVELOPMENT
9360 SUNSET DRIVE, SUITE 220
MIAMI, FLORIDA 33173 (C.A.N. 3538)
TEL. (305) 264-8100 FAX. (305) 262-6978

COMP–ANL\W16–11SAT

S–3000/3062 ALUM. PROJECTED WDW. (L.M.I.)

SOL–A–TROL ALUMINUM PRODUCTS
4101 N.W. 132ND STREET
MIAMI, FL. 33054
TEL. (305) 681–2020 FAX. (305) 681–2035

revisions:

no	date	by	description

date: 02–15–16
scale: –
dr. by: HAMID
chk. by:

drawing no.
W16–11

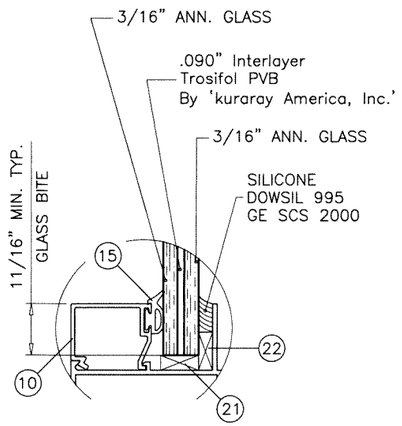

GLASS TYPE 'A'

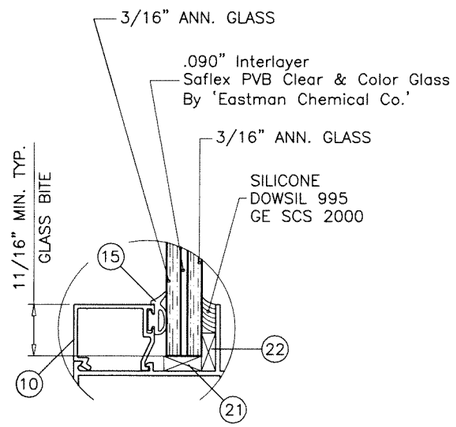

GLASS TYPE 'B'

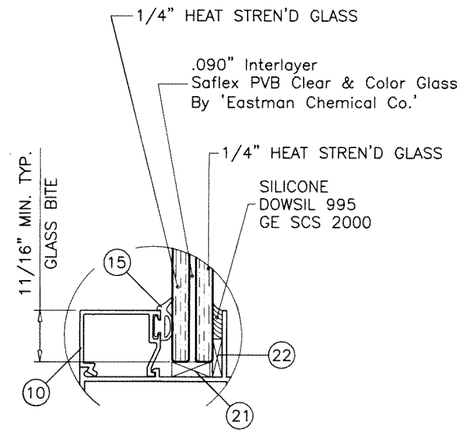

GLASS TYPE 'C'

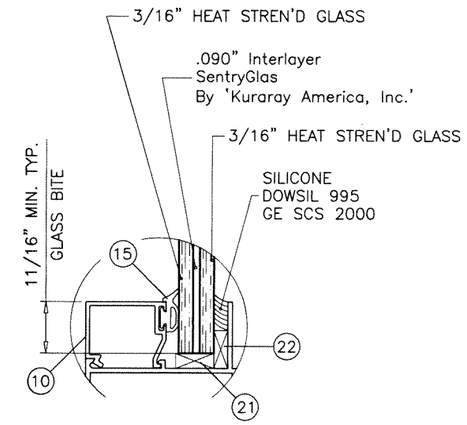

GLASS TYPE 'D'

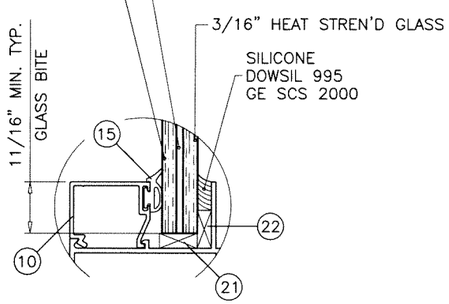

GLASS TYPE 'F'

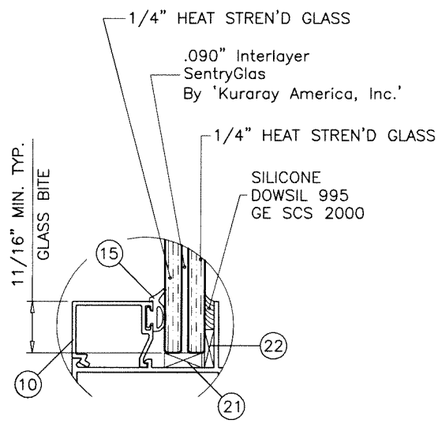

GLASS TYPE 'G'

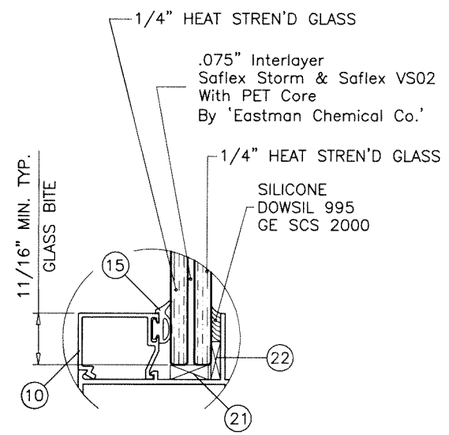

GLASS TYPE 'H'

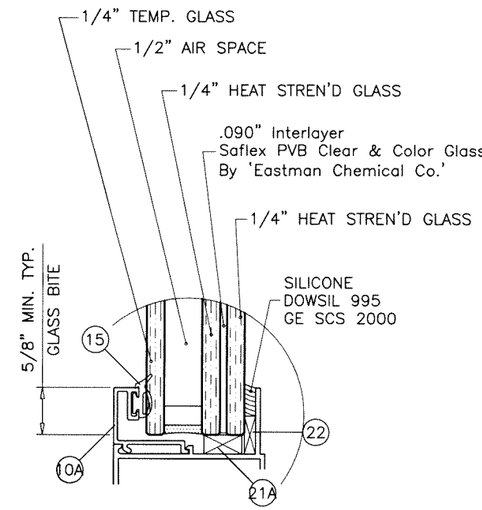

GLASS TYPE 'I'

GLAZING OPTIONS

1/2" AIR SPACE CONSISTING OF:

SPACER:
GALV. STEEL BOX SPACER BY 'ALLMETAL' AROUND THE PERIMETER OF THE GLASS

PRIMARY SEALANT:
TYPE PB-29 BY 'KOMMERLING/ROYAL'

SECONDARY SEALANT:
DC-982 BY 'DOWSIL'

Sealed: 12/18/2023

JALAL FAROOQ
LICENSE
No. 81223
STATE OF FLORIDA
PROFESSIONAL ENGINEER

FL #19976

AL-FAROOQ CORPORATION
ENGINEERS & PRODUCT DEVELOPMENT
9360 SUNSET DRIVE, SUITE 220
MIAMI, FLORIDA 33173 (C.A.N. 3538)
TEL. (305) 264-8100 FAX. (305) 262-6978

COMP-ANL\W16-11SAT

S-3000/3062 ALUM. PROJECTED WDW. (L.M.I.)

SOL-A-TROL ALUMINUM PRODUCTS
4101 N.W. 132ND STREET
MIAMI, FL. 33054
TEL. (305) 681-2020 FAX. (305) 681-2035

revisions:

no	date	by	description

date: 02-15-16
scale: 1/2" = 1"
dr. by: TARIQ
chk. by:

drawing no. W16-11

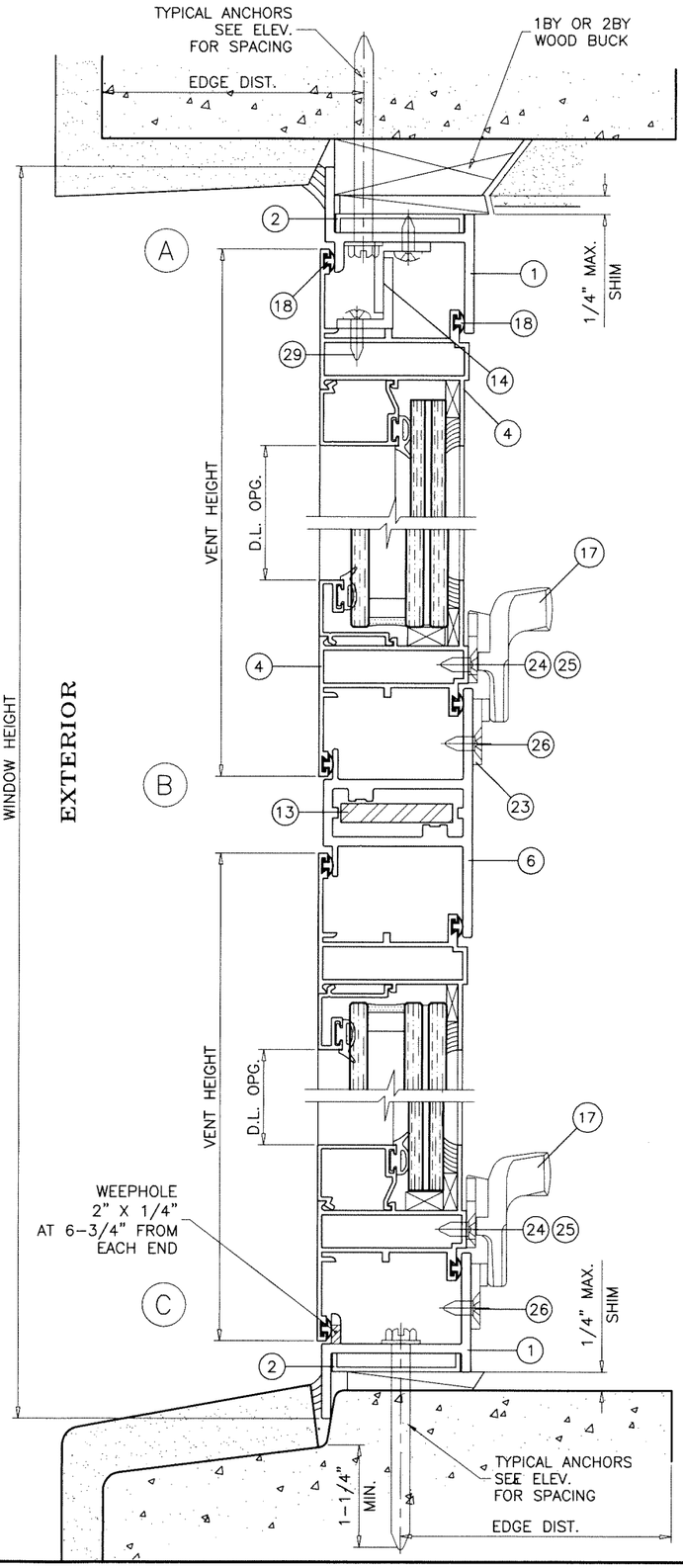

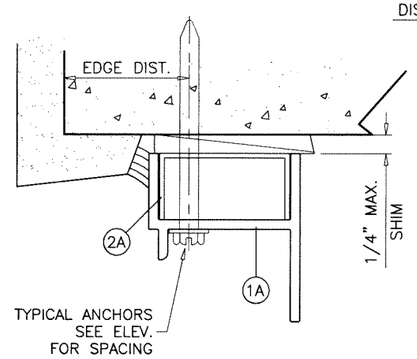

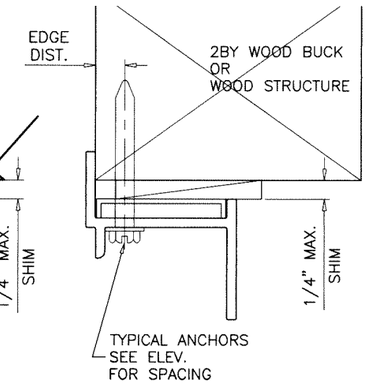

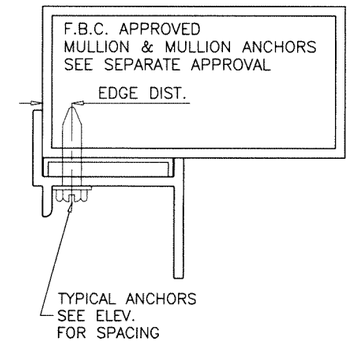

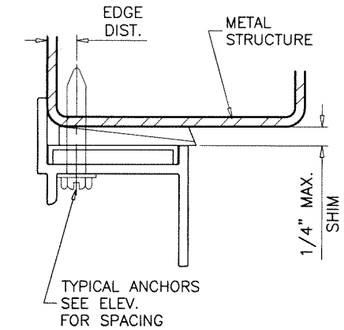

TYPICAL ANCHORS: SEE ELEV. FOR SPACING

1/4" DIA. ULTRACON+ BY 'DEWALT' (Fu=164 KSI, Fy=148 KSI)

INTO 2BY WOOD BUCKS OR WOOD STRUCTURES
1-1/2" MIN. PENETRATION INTO WOOD (HEAD/SILL/JAMBS)

THRU 1BY OR 2BY BUCKS INTO CONC. OR BLOCKS
1-1/4" MIN. EMBED INTO CONCRETE (HEAD/SILL/JAMBS)
1-1/4" MIN. EMBED INTO BLOCKS (JAMBS)

DIRECTLY INTO CONCRETE OR BLOCKS
1-1/4" MIN. EMBED INTO CONCRETE (HEAD/SILL/JAMBS)
1-1/4" MIN. EMBED INTO BLOCKS (JAMBS)

#14 SMS OR SELF-DRILLING SCREWS (GRADE 2 CRS)

INTO F.B.C. APPROVED MULLIONS
AND
INTO METAL STRUCTURES (HEAD/SILL/JAMBS)
(3) THREADS MIN. TO EXTEND BEYOND METAL THICKNESS
ALUMINUM: 1/8" THK. MIN. (6063-T5 MIN.)
STEEL: 1/8" THK. MIN. (Fy = 36 KSI MIN.)
(STEEL IN CONTACT WITH ALUMINUM TO BE PLATED OR PAINTED)

CRITICAL EDGE DISTANCE

INTO CONCRETE AND BLOCKS = 1-1/4" MIN.
INTO WOOD STRUCTURE = 7/16" MIN.
INTO METAL STRUCTURE = 7/16" MIN.

WOOD AT HEAD, SILL OR JAMBS SG = 0.55 MIN.
CONCRETE AT HEAD, SILL OR JAMBS f'c = 3000 PSI MIN.
C-90 HOLLOW/FILLED BLOCK AT JAMBS f'm = 2000 PSI MIN.

SEALANTS:

FRAME AND VENT CORNERS AND INSTALLATION SCREWS AT SILL SEALED WITH WHITE/ALUMINUM COLORED SEALANT.

FLANGE AND EQUAL LEG FRAMES CAN BE USED AT ALL ANCHORAGE CONDITIONS.

WOOD BUCKS AND METAL STRUCTURE NOT BY 'SOL-A-TROL' MUST SUSTAIN LOADS IMPOSED BY GLAZING SYSTEM AND TRANSFER THEM TO THE BUILDING STRUCTURE.

SERIES 3062

Sealed: 12/18/2023

FL #19976

JALAL FAROOQ
LICENSE
No. 81223
STATE OF FLORIDA
PROFESSIONAL ENGINEER

AL-FAROOQ CORPORATION
ENGINEERS & PRODUCT DEVELOPMENT
9360 SUNSET DRIVE, SUITE 220
MIAMI, FLORIDA 33173 (C.A.N. 3538)
TEL. (305) 264-8100 FAX. (305) 262-6978

COMP-ANL\W16-11SAT

S-3000/3062 ALUM. PROJECTED WDW. (L.M.I.)

SOL-A-TROL ALUMINUM PRODUCTS
4101 N.W. 132ND STREET
MIAMI, FL. 33054
TEL. (305) 681-2020 FAX. (305) 681-2035

revisions:

no	date	by	description

date: 02-15-16
scale: 1/2" = 1"
dr. by: HAMID
chk. by:

drawing no. W16-11

sheet 6 of 12

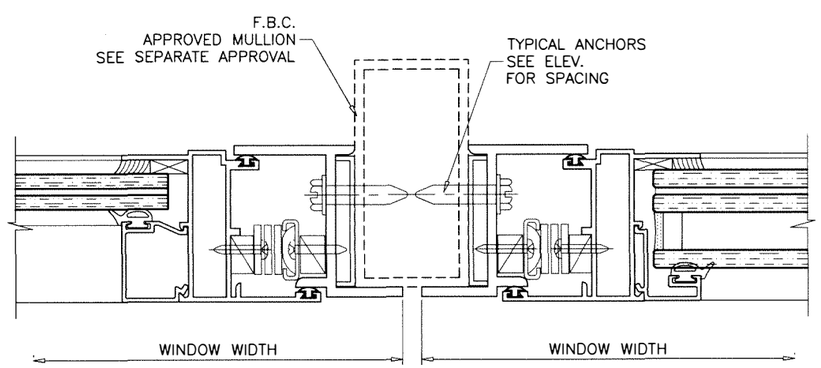

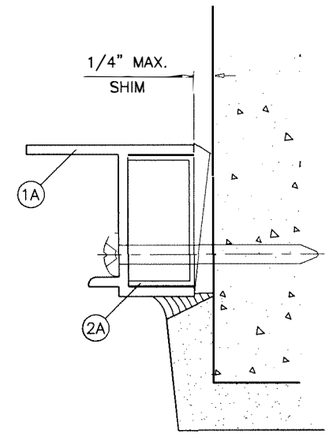

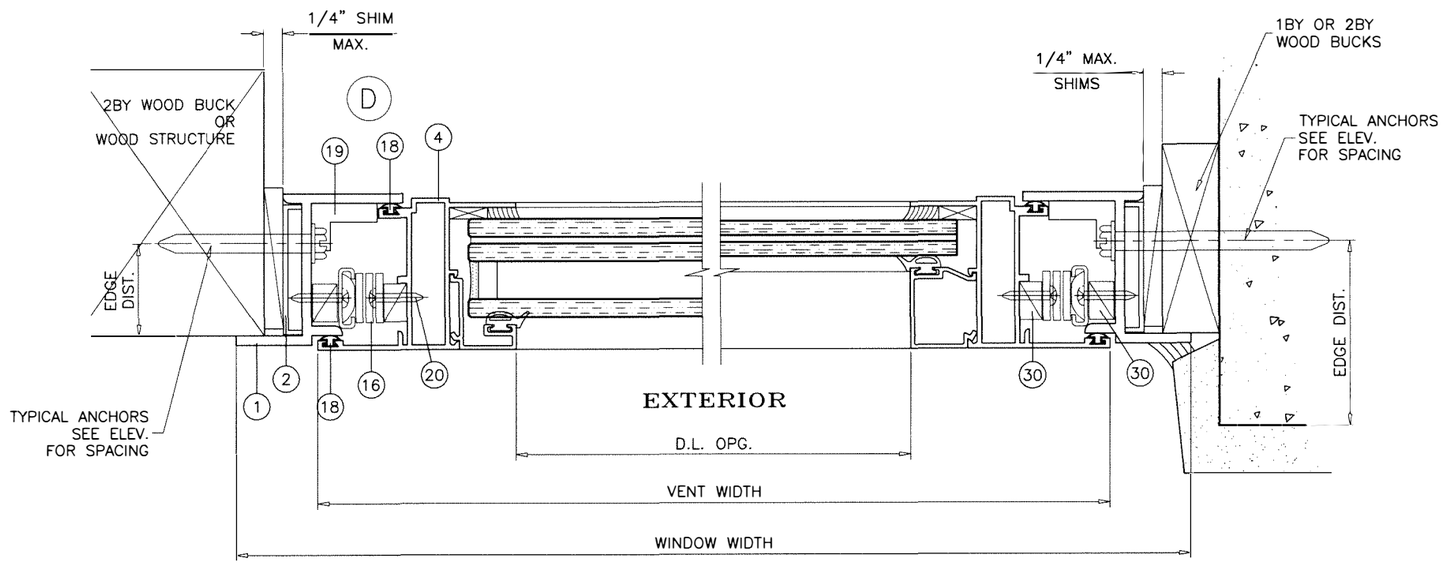

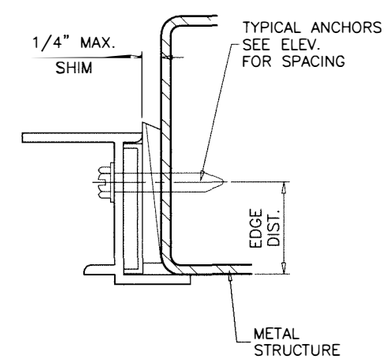

SERIES 3062

Sealed: 12/18/2023

FL #19976

JALAL FAROOQ
LICENSE
No. 81223
STATE OF FLORIDA
PROFESSIONAL ENGINEER

AL-FAROOQ CORPORATION
ENGINEERS & PRODUCT DEVELOPMENT
9360 SUNSET DRIVE, SUITE 220
MIAMI, FLORIDA 33173 (C.A.N. 3538)
TEL. (305) 264-8100 FAX. (305) 262-6978
COMP-ANL\W16-11SAT

S-3000/3062 ALUM. PROJECTED WDW. (L.M.I.)

SOL-A-TROL ALUMINUM PRODUCTS
4101 N.W. 132ND STREET
MIAMI, FL. 33054
TEL. (305) 681-2020 FAX. (305) 681-2035

revisions:

no	date	by	description

date: 02-15-16
scale: 1/2" = 1"
dr. by: HAMID
chk. by:

drawing no.
W16-11

sheet 7 of 12

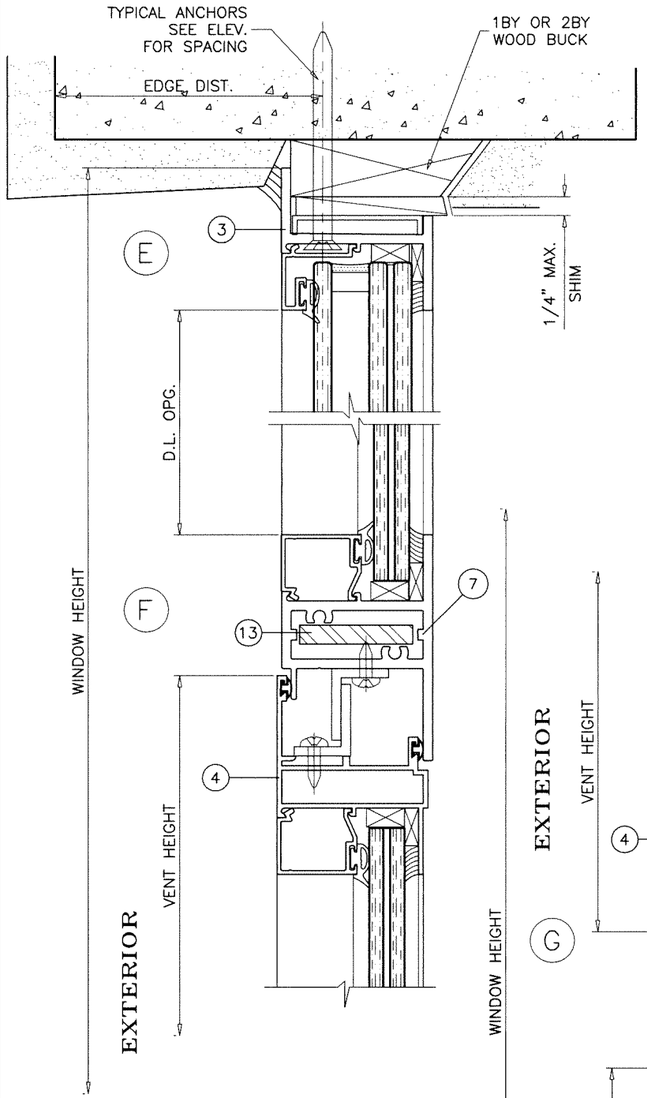

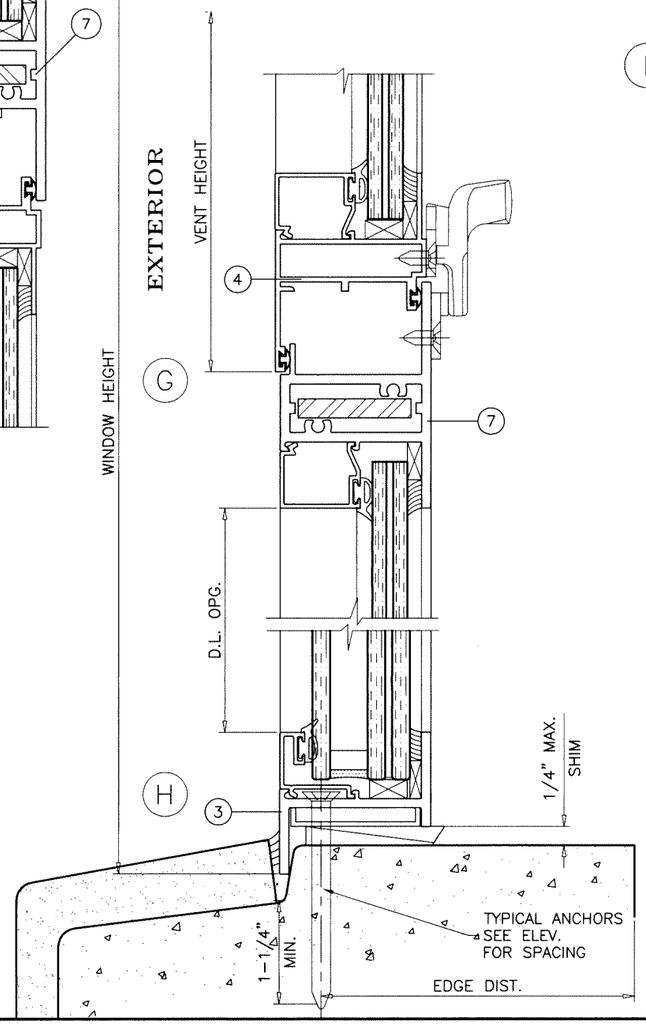

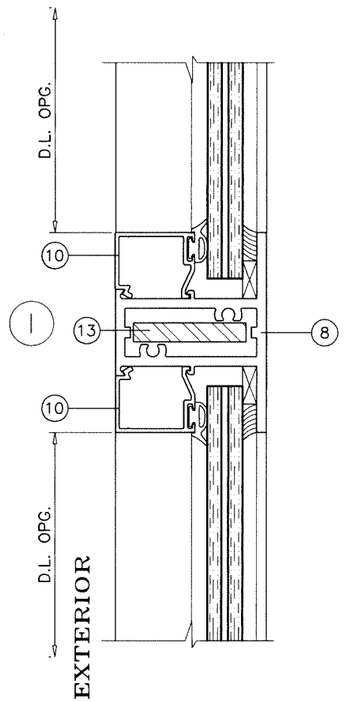

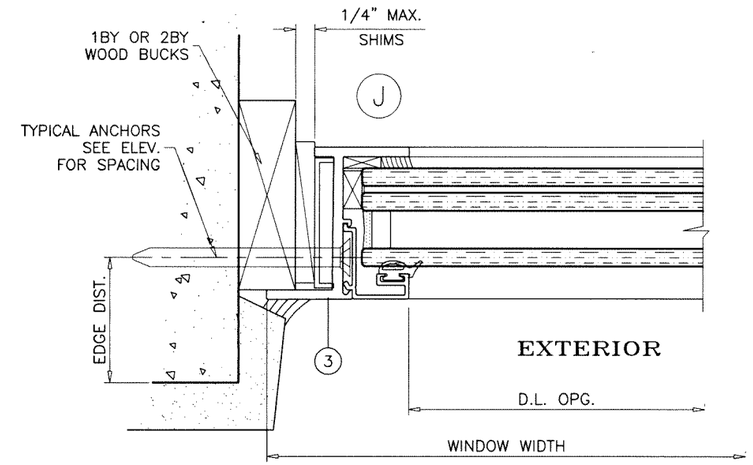

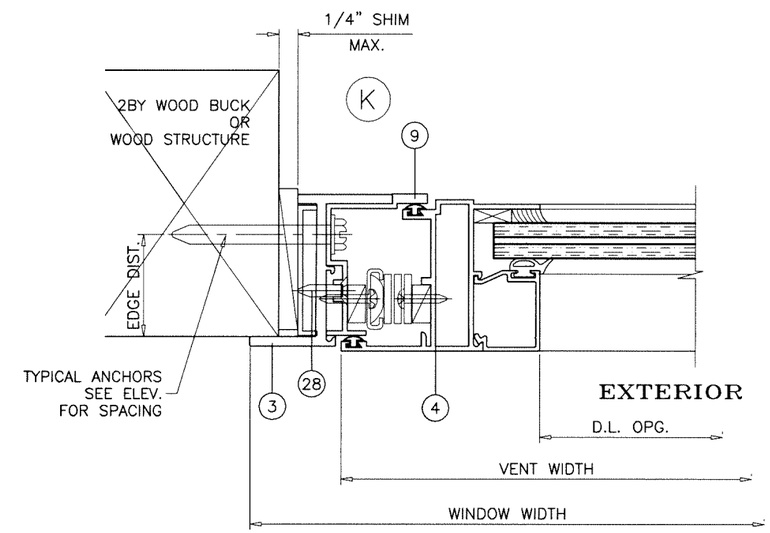

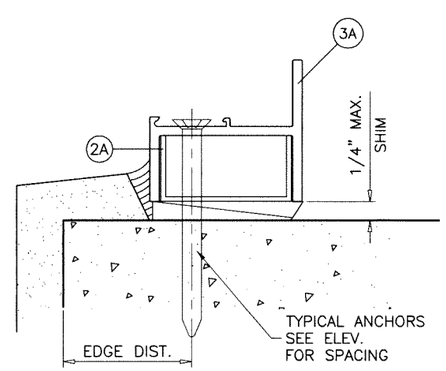

SERIES 3062

Sealed: 12/18/2023

FL #19976

JALAL FAROOQ
LICENSE
No. 81223
STATE OF FLORIDA
PROFESSIONAL ENGINEER

AL-FAROOQ CORPORATION
ENGINEERS & PRODUCT DEVELOPMENT
9360 SUNSET DRIVE, SUITE 220
MIAMI, FLORIDA 33173 (C.A.N. 3538)
TEL. (305) 264-8100 FAX. (305) 262-6978

COMP-ANL\W16-11SAT

S-3000/3062 ALUM. PROJECTED WDW. (L.M.I.)

SOL-A-TROL ALUMINUM PRODUCTS
4101 N.W. 132ND STREET
MIAMI, FL. 33054
TEL. (305) 681-2020 FAX. (305) 681-2035

revisions:

no	date	by	description

date: 02-15-16
scale: 1/2" = 1"
dr. by: HAMID
chk. by:

drawing no. W16-11

sheet 8 of 12

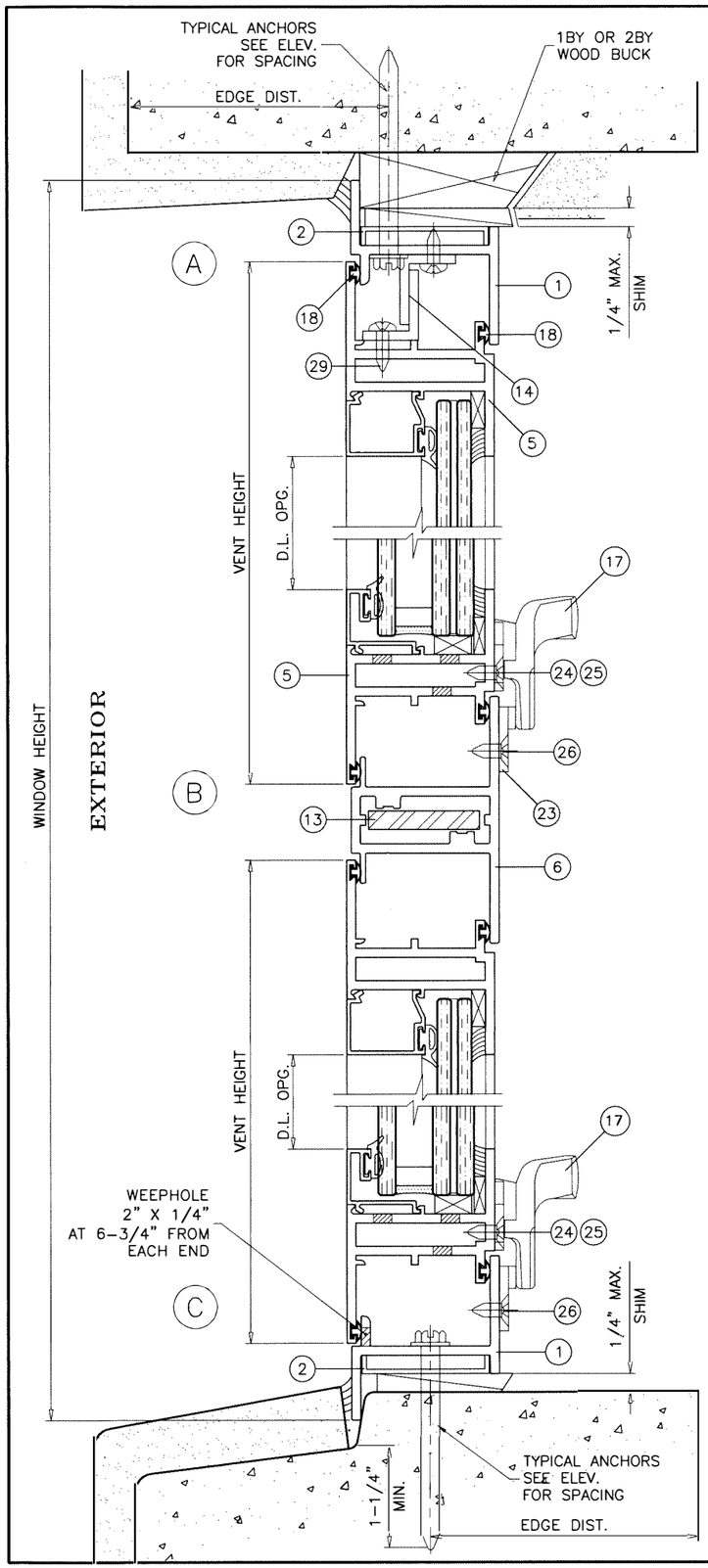

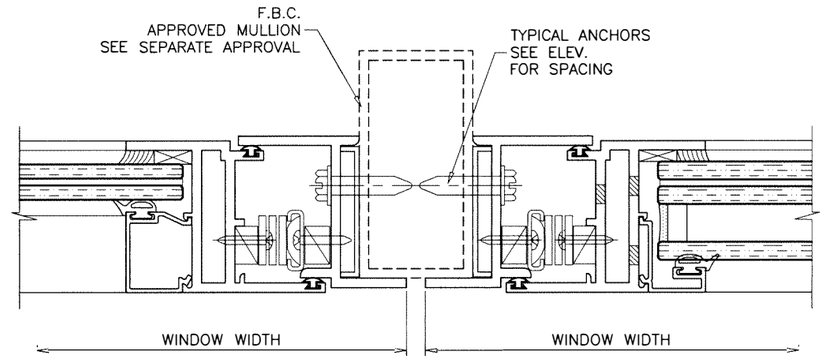

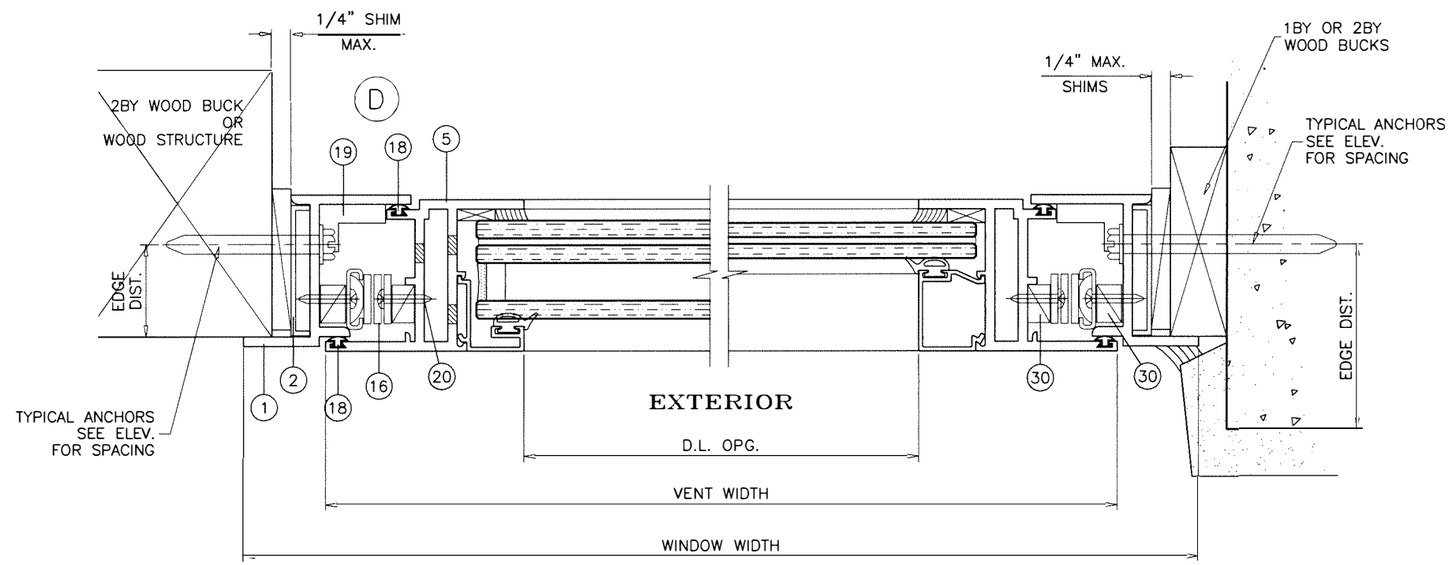

SERIES 3000

Sealed: 12/18/2023

FL #19976

JALAL FAROOQ
LICENSE
No. 81223
STATE OF FLORIDA
PROFESSIONAL ENGINEER

AL-FAROOQ CORPORATION
ENGINEERS & PRODUCT DEVELOPMENT
9360 SUNSET DRIVE, SUITE 220
MIAMI, FLORIDA 33173 (C.A.N. 3538)
TEL. (305) 264-8100 FAX. (305) 262-6978

COMP-ANL\W16-11SAT

S-3000/3062 ALUM. PROJECTED WDW. (L.M.I.)

SOL-A-TROL ALUMINUM PRODUCTS
4101 N.W. 132ND STREET
MIAMI, FL. 33054
TEL. (305) 681-2020 FAX. (305) 681-2035

revisions:

no	date	by	description

date: 02-15-16
scale: 1/2" = 1"
dr. by: HAMID
chk. by:

drawing no.
W16-11

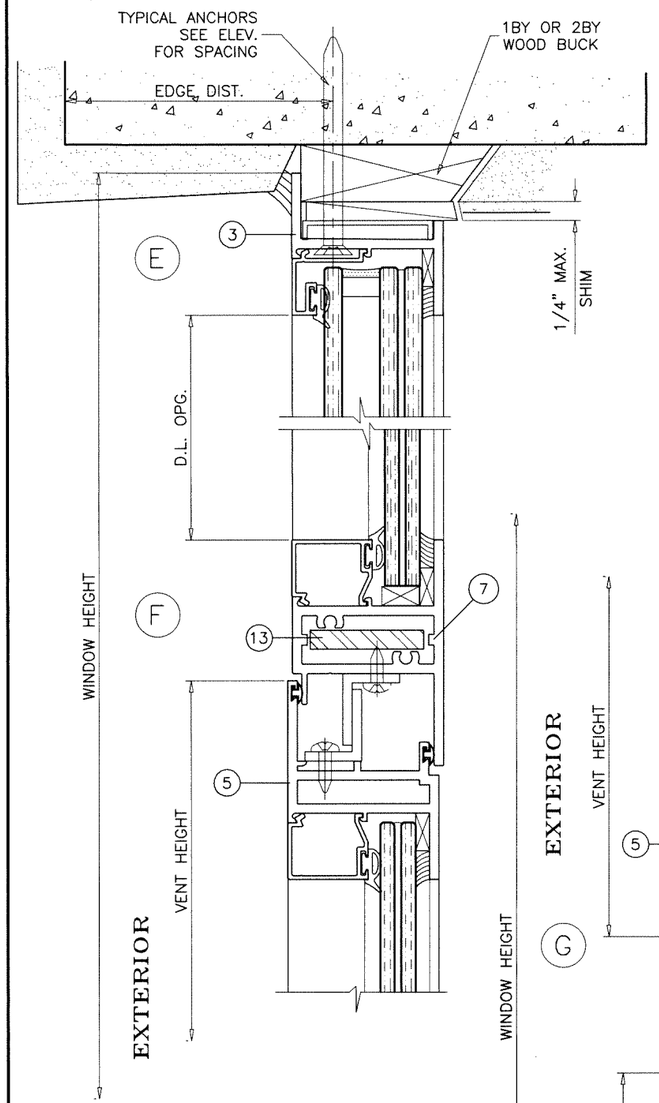

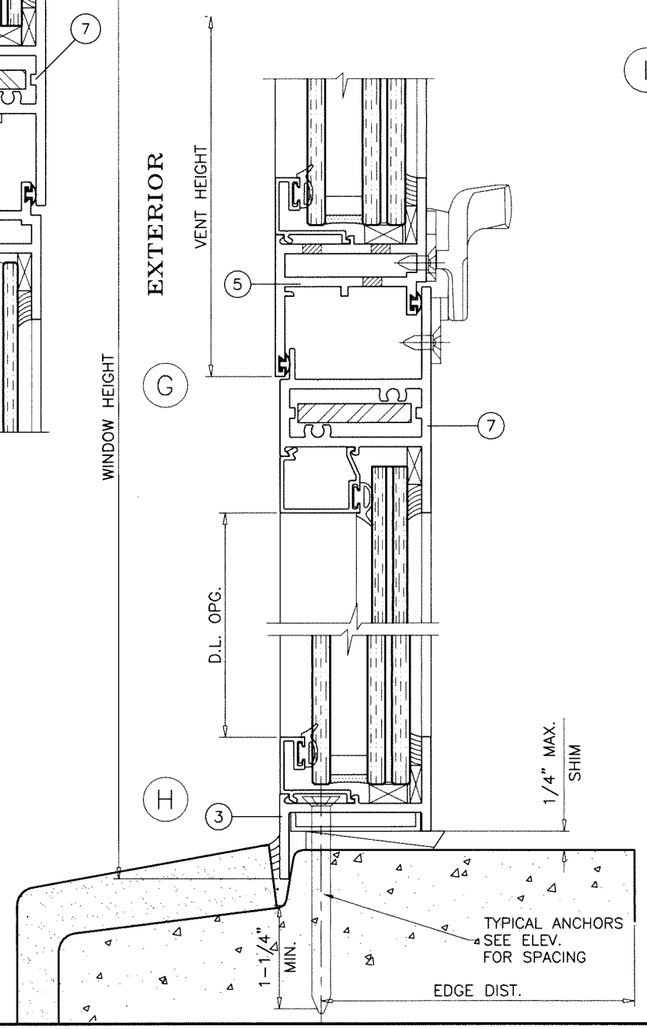

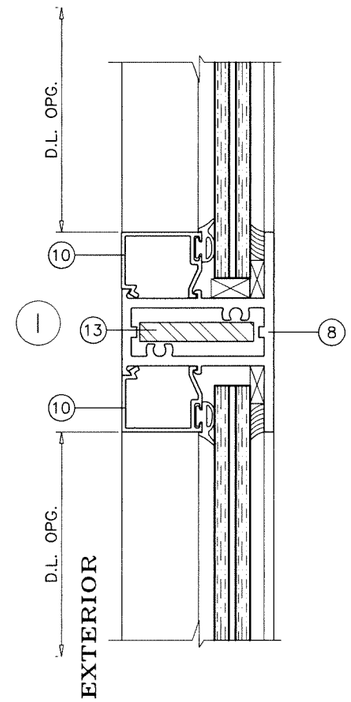

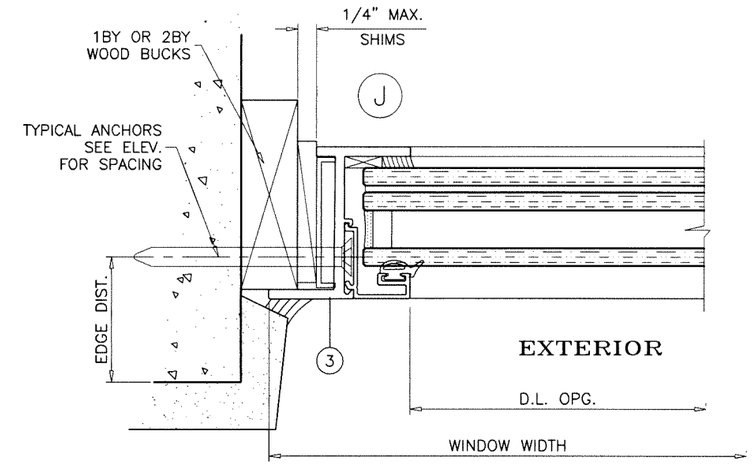

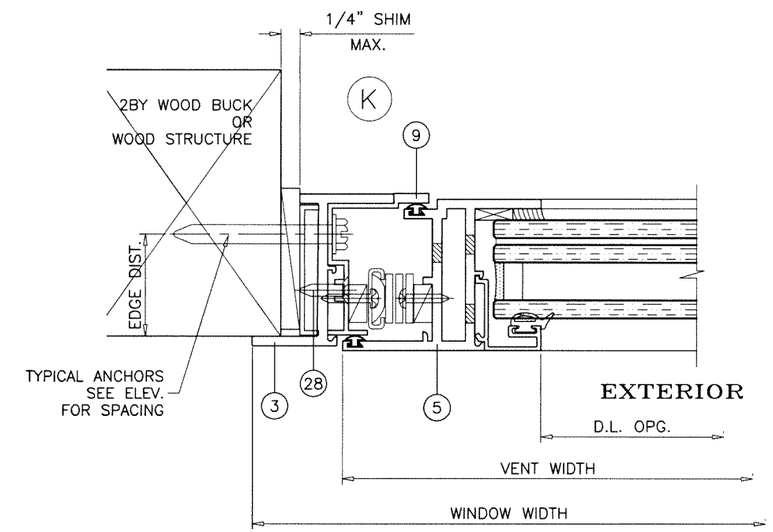

SERIES 3000

Sealed: 12/18/2023

FL #19976

JALAL FAROOQ
LICENSE
No. 81223
STATE OF FLORIDA
PROFESSIONAL ENGINEER

AL-FAROOQ CORPORATION
ENGINEERS & PRODUCT DEVELOPMENT
9360 SUNSET DRIVE, SUITE 220
MIAMI, FLORIDA 33173 (C.A.N. 3538)
TEL. (305) 264-8100 FAX. (305) 262-6978

COMP-ANL\W16-11SAT

S-3000/3062 ALUM. PROJECTED WDW. (L.M.I.)

SOL-A-TROL ALUMINUM PRODUCTS
4101 N.W. 132ND STREET
MIAMI, FL. 33054
TEL. (305) 681-2020 FAX. (305) 681-2035

revisions:

no	date	by	description

date: 02-15-16
scale: 1/2" = 1"
dr. by: HAMID
chk. by:

drawing no.
W16-11

sheet 10 of 12

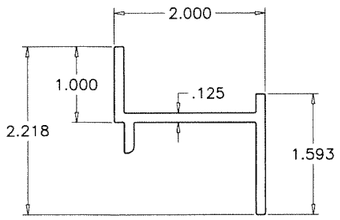

1 FRAME HEAD/SILL/JAMB
FLANGE

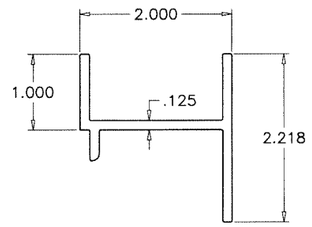

1A FRAME HEAD/SILL/JAMB
EQUAL LEG

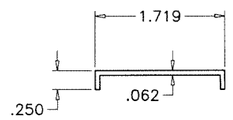

2 SUPPORT CHANNEL
AT ANCHOR LOCATIONS

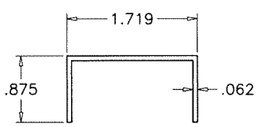

2A SUPPORT CHANNEL
AT ANCHOR LOCATIONS

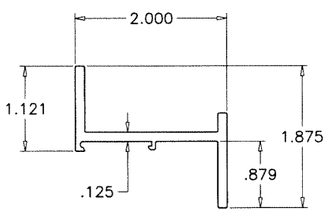

3 FIX. LITE HEAD/SILL/JAMB
FLANGE

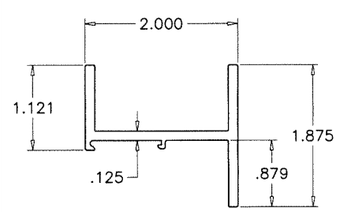

3A FIX. LITE HEAD/SILL/JAMB
EQUAL LEG

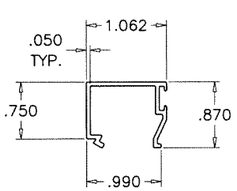

10 GLAZING STOP
(LAM. GLASS)

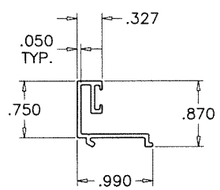

10A GLAZING STOP
(INSUL. LAM. GLASS)

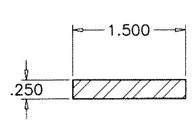

13 HORIZ. IMPOST REINFORCING

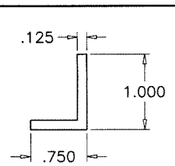

14 SNUBBER ANGLE

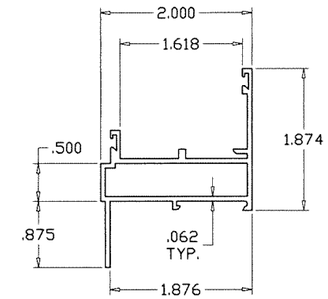

4 VENT (3062)

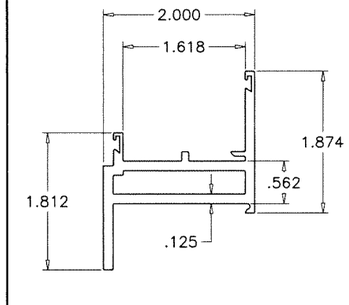

5 VENT (3000)

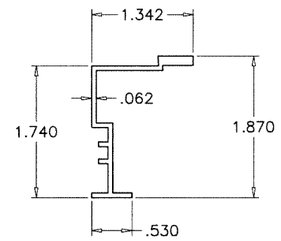

9 FTO ADAPTER

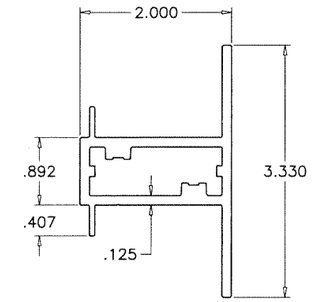

6 HORIZ. IMPOST (X/X)

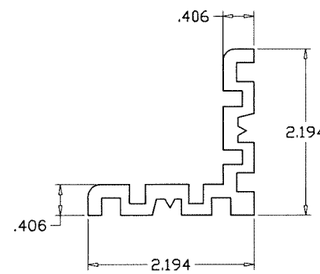

11 VENT CORNER KEY (3062)

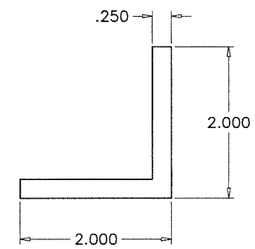

12 VENT CORNER KEY (3000)

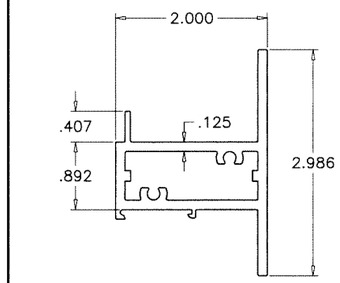

7 HORIZ. IMPOST (X/O OR O/X)

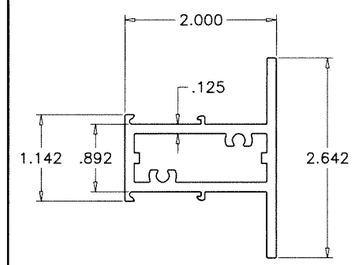

8 HORIZ. IMPOST (O/O)

LOCKS:

OPTION #1:

(2) CAM LOCKS AT EACH VENT BY 'FRESH LINK'
PART #1305 & 1306 EACH INSTALLED WITH
(2) #8 X 5/8" MACHINE SCREWS
HOOKED KEEPERS AT VERTICAL STILES BY 'FRESH LINK'
PART #PN K-2014 AND FLAT KEEPERS AT HORIZONTAL RAILS
BY 'BRONZECRAFT' PART #3282-059-0122 FACING LOCKS
EACH INSTALLED WITH (2) #10 X 3/8" P FH SMS

OPTION #2:

(2) SWEEP LOCKS AT EACH VENT BY 'MELRON CORP.'
PART #1735 EACH INSTALLED WITH (2) #8 X 5/8"
MACHINE SCREWS
KEEPERS FACING LOCKS INSTALLED WITH
(2) #10 X 3/8" P FH SMS.

HINGES:

4 BAR ST. STEEL HINGES FASTENED TO
FRAME W/ (5) #10 X 7/8" PH SMS
VENT W/ (4) #10 X 7/8" PH SMS

SNUBBERS:

3/4" X 1" X 5" LONG X 1/8" THK. ALUM ANGLE
(2) PER VENT AT 7" FROM ENDS EACH INSTALLED
WITH (4) #10 X 3/4" PH SMS
MATCHING ANGLES INSTALLED IN FRAME

OPERATOR:

2 BAR OPERATORS FASTENED TO FRAME AND VENT
WITH (2) #10 X 1" PH TYPE B SCREWS

Sealed: 12/18/2023

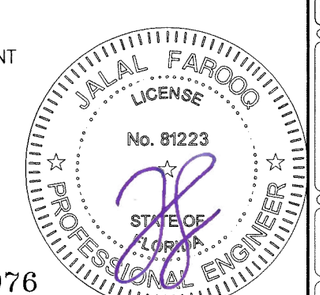

FL #19976

AL-FAROOQ CORPORATION
ENGINEERS & PRODUCT DEVELOPMENT
9360 SUNSET DRIVE, SUITE 220
MIAMI, FLORIDA 33173 (C.A.N. 3538)
TEL. (305) 264-8100 FAX. (305) 262-6978

COMP-ANL\W16-11SAT

S-3000/3062 ALUM. PROJECTED WDW. (L.M.I.)

SOL-A-TROL ALUMINUM PRODUCTS
4101 N.W. 132ND STREET
MIAMI, FL. 33054
TEL. (305) 681-2020 FAX. (305) 681-2035

revisions:

no	date	by	description

date: 02-15-16
scale: 1/2" = 1"
dr. by: HAMID
chk. by:

drawing no.
W16-11

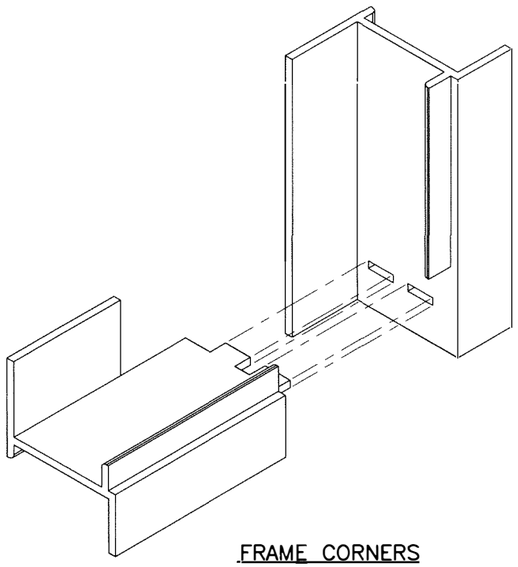

FRAME CORNERS

STAKED MORTISE AND TENON FABRICATION

ITEM	PART #	QUANTITY	DESCRIPTION	MATERIAL	MANF./SUPPLIER/REMARKS
1	ARSO-127	1	FRAME HEAD/SILL/JAMB (FLANGE)	6063-T5	–
1A	ARSO-142	1	FRAME HEAD/SILL/JAMB (EQUAL LEG)	6063-T5	–
2	–	1	SUPPORT CHANNEL (FLANGE), 3" LONG	3003-H14	AT ANCHOR LOCATIONS
2A	–	1	SUPPORT CHANNEL (EQUAL LEG), 3" LONG	3003-H14	AT ANCHOR LOCATIONS
3	ARSO-114	1	FIX. LITE HEAD/SILL/JAMB (FLANGE)	6063-T6	–
3A	ARSO-934	1	FIX. LITE HEAD/SILL/JAMB (EQUAL LEG)	6063-T6	–
4	ARSO-176	4/ VENT	VENT (3062)	6063-T6	–
5	ARSO-105	4/ VENT	VENT (3000)	6063-T6	–
6	ARSO-184	AS REQD.	HORIZ. IMPOST (X/X)	6063-T6	–
7	ARSO-980	AS REQD.	HORIZ. IMPOST (X/O OR O/X)	6063-T6	–
8	ARSO-984	AS REQD.	HORIZ. IMPOST (O/O)	6063-T6	–
9	ARSO-100	AS REQD.	FTO ADAPTER	6063-T6	–
10	ARSO-169	4/ VENT	GLAZING STOP (LAM. GLASS)	6063-T5	–
10A	ARSO-993	4/ VENT	GLAZING STOP (INSUL. LAM. GLASS)	6063-T5	–
11	ARSO-173	1/ CORNER	VENT CORNER KEY (3062)	6063-T5	–
12	–	1/ CORNER	VENT CORNER KEY (3000)	6063-T5	–
13	–	–	HORIZ. IMPOST REINFORCING	STEEL	–
14	–	6/ VENT	SNUBBER ANGLE, 5" LONG	6063-T5	–
15	TR8384E	AS REQD.	GLAZING GASKET (LAM. GLASS)	EPDM	TREMCO, DUROMETER 60±5
16	34-16	2/ VENT	4 BAR HINGE	ST. STEEL	TRUTH OR EQUIV.
17	798L/799R	2/ VENT	CAM LOCK WITH KEEPER	BRONZE	AT 8-3/4" FROM VENT ENDS
18	326-FP-261AB	AS REQD.	BULB WEATHER STRIPPING	VINYL	PROTOTYPE PLASTICS
19	–	AS REQD.	ALUM ANGLE, 4" LONG	6063-T5	–
20	1/4-20 X 3/4"	6/ HINGE	HINGE INSTALLATION SCREWS	ST. STEEL	PAN HEAD SMS
21	326-FP-808B	AS REQD.	SETTING BLOCK (1/2" X 1/4" X 2" LONG) @ 6" FROM ENDS	PVC	PROTOTYPE PLASTICS
21A	–	AS REQD.	SETTING BLOCK (1/2" X 1/4" X 2" LONG) @ 6" FROM ENDS	PVC	PROTOTYPE PLASTICS
22	326-RP-142B	AS REQD.	SIDE BLOCK (1/2" X 1/8" X FULL LENGTH)	PVC	PROTOTYPE PLASTICS
23	ALS4-8-32-80	2/ LOCK	THREADED INSERT	STEEL	AVK FASTENERS
24	#8-32 X 1/2"	2/ LOCK	LOCK INSTALLATION SCREWS (3062)	ST. STEEL	FH MS
25	#10 X 1/2"	2/ LOCK	LOCK INSTALLATION SCREWS (3000)	ST. STEEL	FH SMS
26	#8 X 3/8"	2/ LOCK	KEEPER INSTALLATION SCREWS	ST. STEEL	FH SMS
27	#10 X 1-1/2"	2/ CORNER	IMPOST ASSEMBLY SCREWS	–	PH SELF DRILLING
28	#10 X 3/8"	6/ VENT	FTO ADAPTER SCREWS	–	PH SMS
29	#10 X 3/4"	4/ ANGLE	SNUBBER ANGLE SCREWS	–	PH SMS
30	–	2/ VENT	1/2" X 1/4" X 24" LONG SHIM	PLASTIC	–

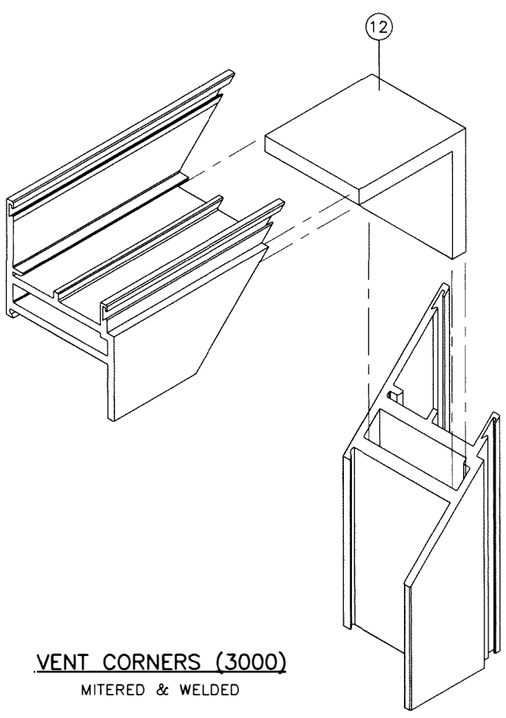

VENT CORNERS (3000)

MITERED & WELDED

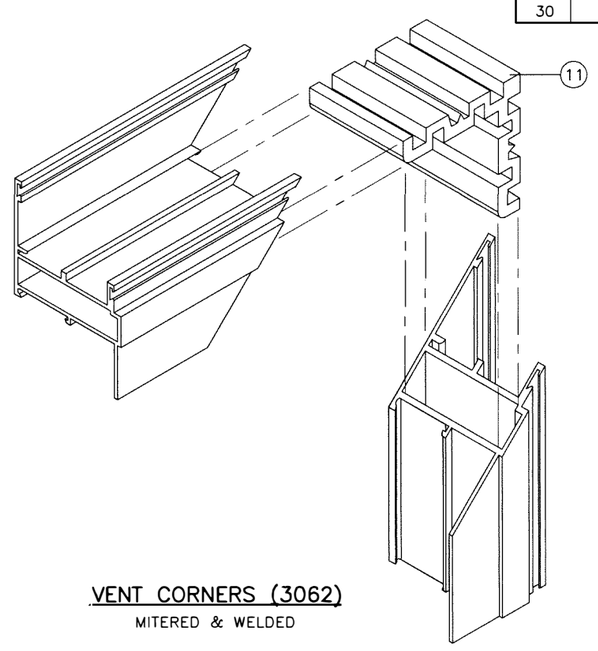

VENT CORNERS (3062)

MITERED & WELDED

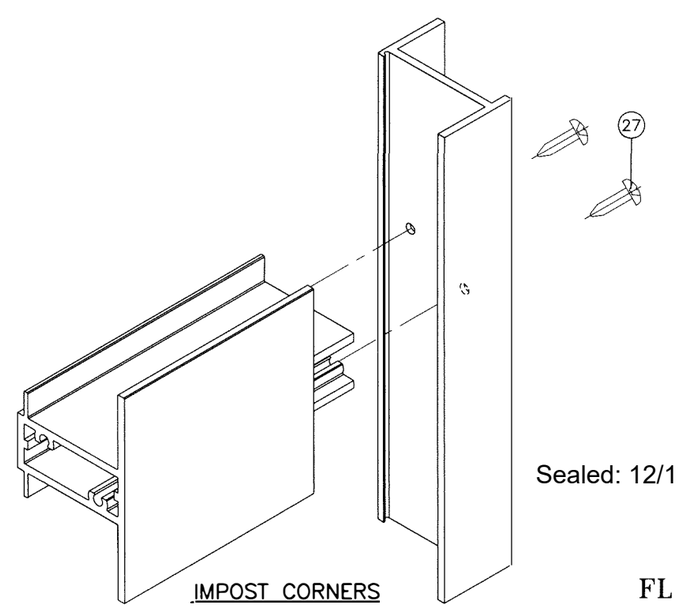

IMPOST CORNERS

Sealed: 12/18/2023

JALAL FAROOQ LICENSE No. 81223 STATE OF FLORIDA PROFESSIONAL ENGINEER

FL #19976

AL-FAROOQ CORPORATION
ENGINEERS & PRODUCT DEVELOPMENT
9360 SUNSET DRIVE, SUITE 220
MIAMI, FLORIDA 33173
TEL. (305) 264-8100 FAX. (305) 262-6978
(C.A.N. 3538)

COMP-ANL\W16-11SAT

S-3000/3062 ALUM. PROJECTED WDW. (L.M.I.)

SOL-A-TROL ALUMINUM PRODUCTS
4101 N.W. 132ND STREET
MIAMI, FL. 33054
TEL. (305) 681-2020 FAX. (305) 681-2035

revisions:

no	date	by	description

date: 02-15-16

scale: 1/2" = 1"

dr. by: HAMID

chk. by:

drawing no. W16-11